Assembly Instruction

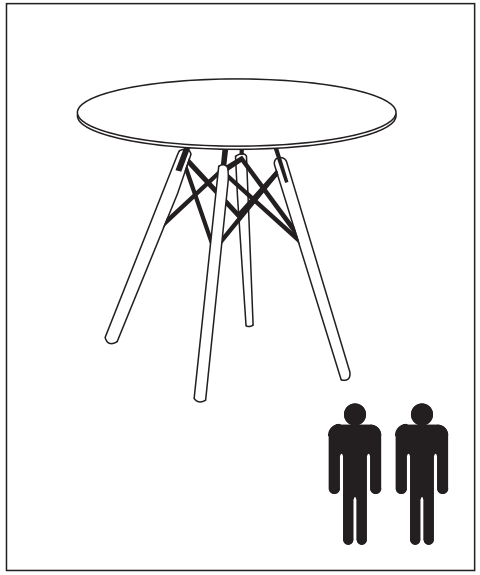

A	X1
B	X4
C	X4
D	X2
E	X1
F	X1

G	H	I	J	K	L
M6X40mm		M6X16mm			M6X38mm
X4	X8	X4	X4	X8	X4

L M

M

X4

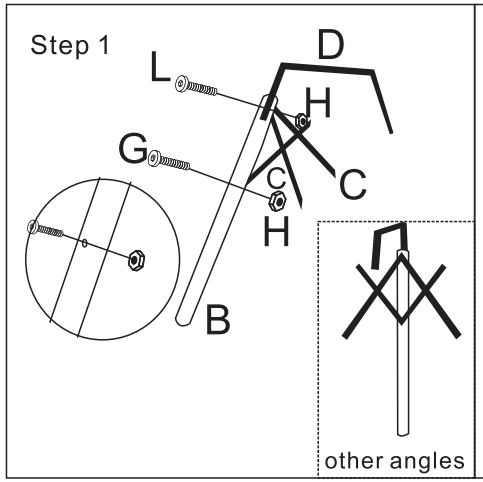

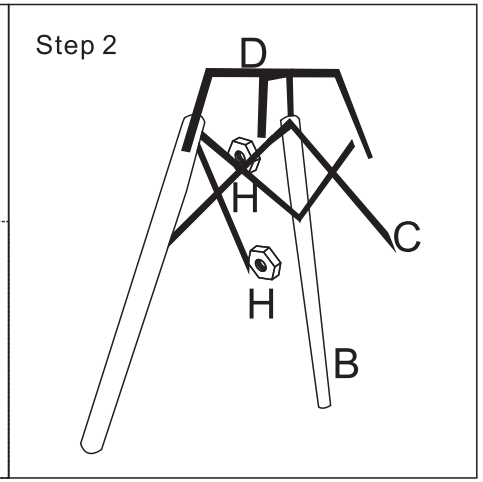

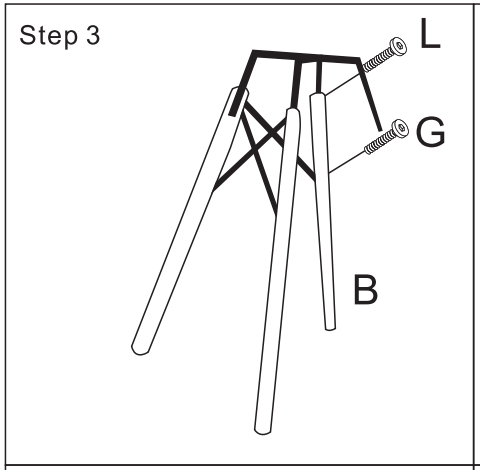

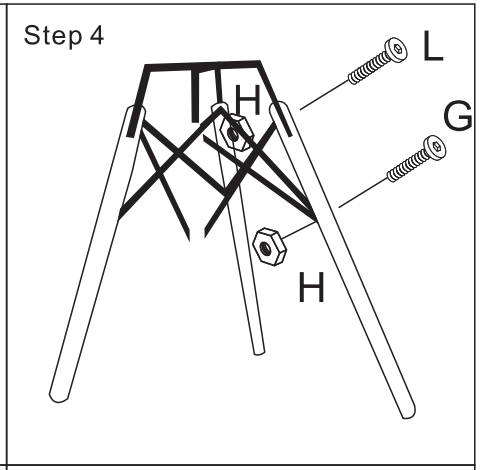

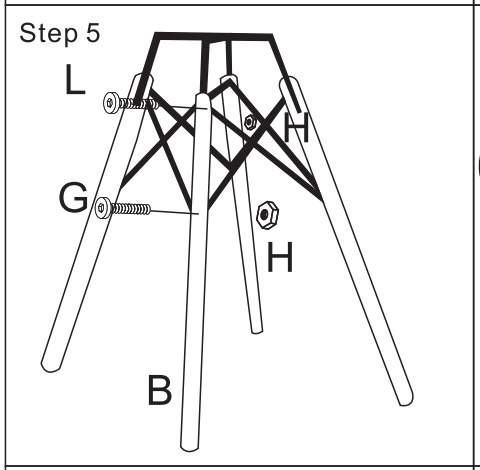

Please don't tighten all the screws until step 6